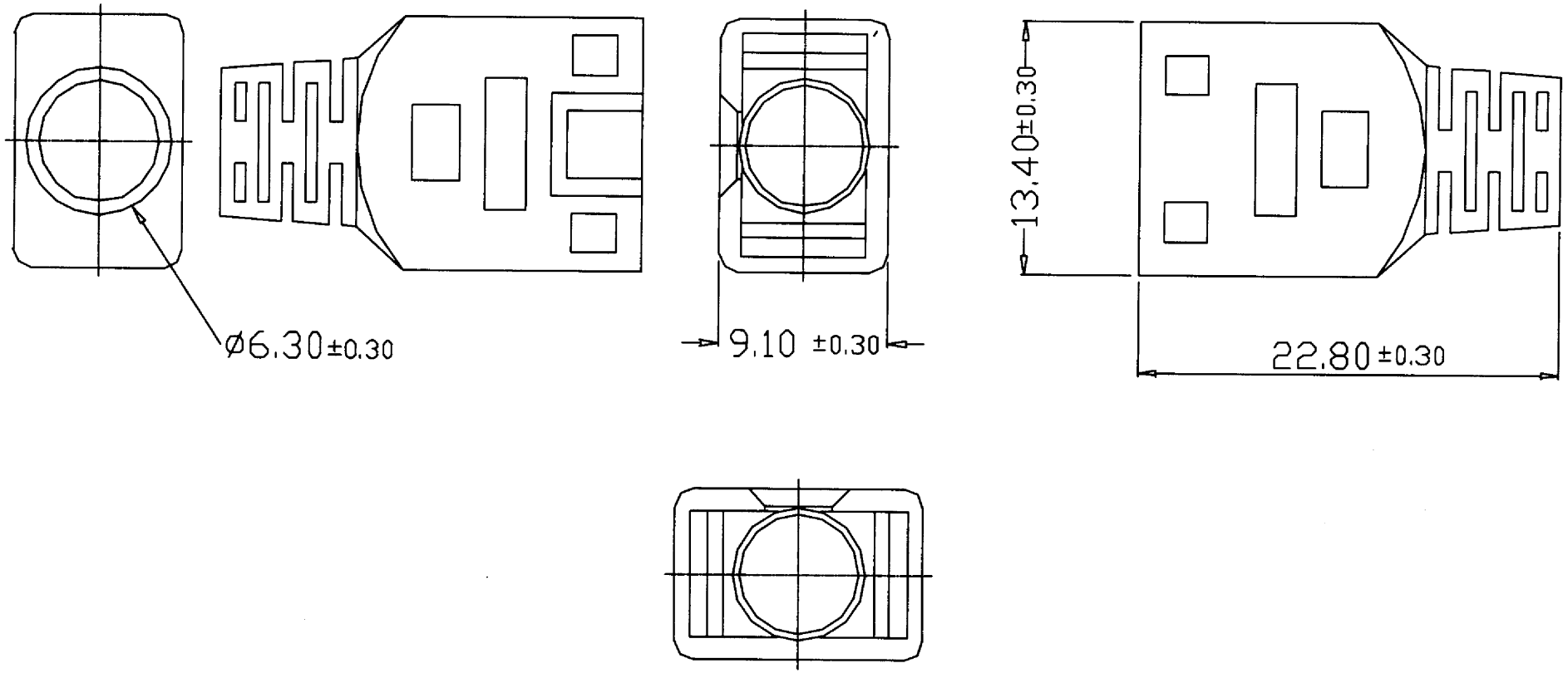

COBLE ENTERPRISE CO., LTD.			
TITLE	SR0814-*.* ABS COVER		
APPROVE	PETER KUO	DESIGN	C.M.CHEN
DATE	11-20-2002	F. No.	SR0814